ASSEMBLY INSTRUCTION

KEITH

2 DRAWER BEDSIDE

ITEM CODE 85491

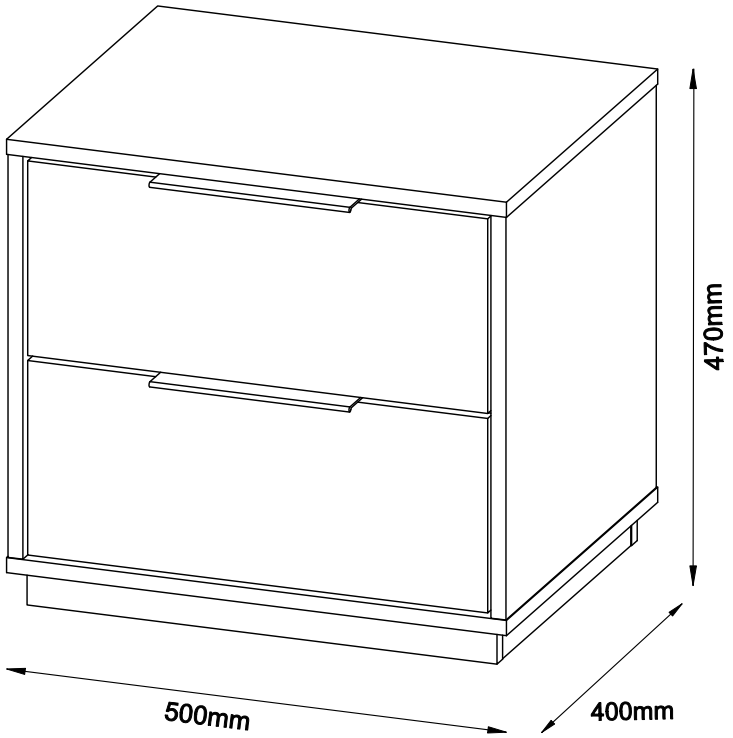

Imported by JWA Furniture Pty Ltd, Qld, Brisbane Australia
For any assistance with assembly or for missing parts please refer to your receipt

PRE-ASSEMBLY PREPARATION

Before you start:

1. Choose a clean, level, spacious assembly area. Avoid hard surfaces that may damage the product.
2. Take care when lifting. Product should be assembled as near as possible to the point of use.
3. Ensure that you have all required contents for complete assembly.
4. Always read the assembly instructions carefully before beginning assembly.
5. Keep all hardware parts and packaging out of reach of small children.
6. Do not over tighten the screws and bolts as this may damage the threads.
7. Assembly is to be carried out by a competent adult(s) ONLY.
8. During assembly, children should be kept away from the product due to possible risk to injury.
9. Do not use this item if any components are missing or damaged.
10. Please keep the instructions for future reference.

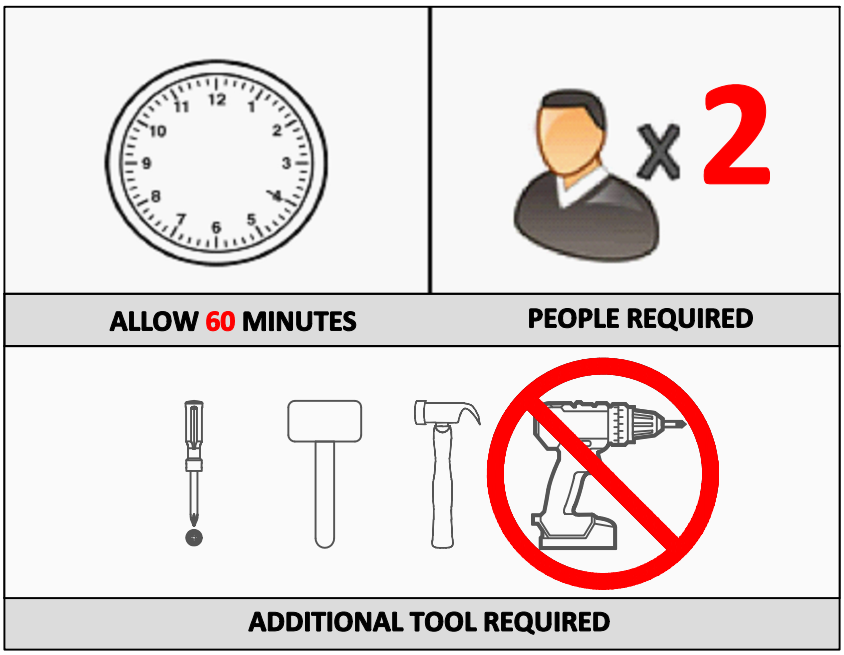

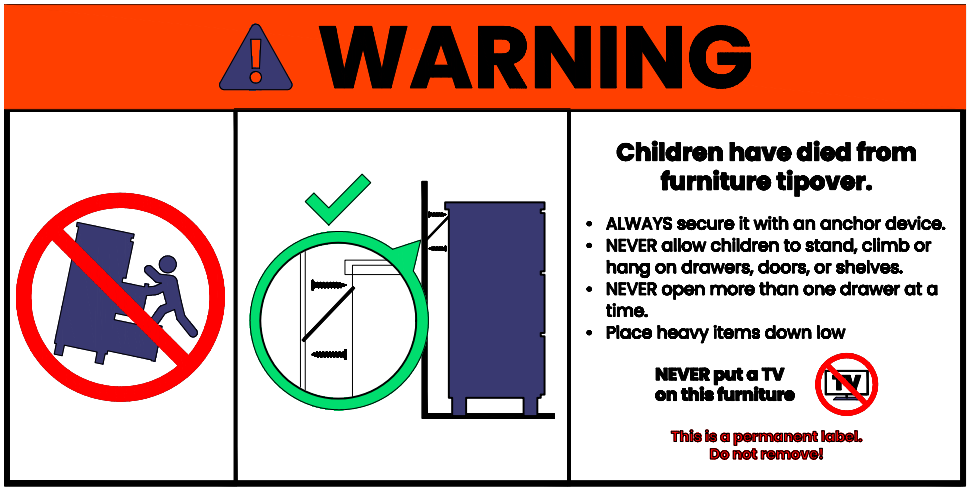

PARTS LIST

Ⓐ X 5 SETS A1 A2 A3 MINIFIX	Ⓑ X 20 WOOD DOWEL M8 X 30	Ⓒ X 5 M6 X 50MM CSK CAP WOOD SCREW	Ⓓ X 1 ALLEN KEY M4	Ⓔ X 28 M3.5 X 16MM C.B SCREW
Ⓕ X 4 M3 X 12MM C.B SCREW	Ⓖ X 26 M4 X 38MM C.B SCREW	Ⓗ X 16 5/8 NAIL	Ⓘ X 4 5/8 PVC NAIL LEG	Ⓙ X 2 4020 L BAR 200MM HANDLE
Ⓚ X 2 SETS K1 K2 DRAWER SLIDE 12"				

1	TOP PANEL	1 PC
2	BOTTOM PANEL	1 PC
3	SIDE PANEL (L)	1 PC
4	SIDE PANEL (R)	1 PC
5	BACK PANEL	1 PC

6	DRAWER FRONT	2 PCS
7	DRAWER BACK	2 PCS
8	DRAWER SIDE	4 PCS
9	DRAWER BOTTOM	2 PCS
10	LEG PANEL F&B	2 PCS
11	LEG PANEL SIDE	2 PCS

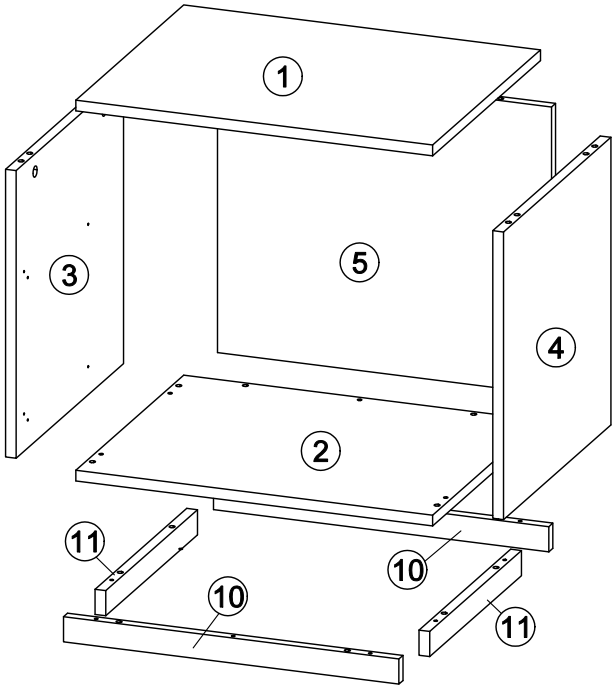

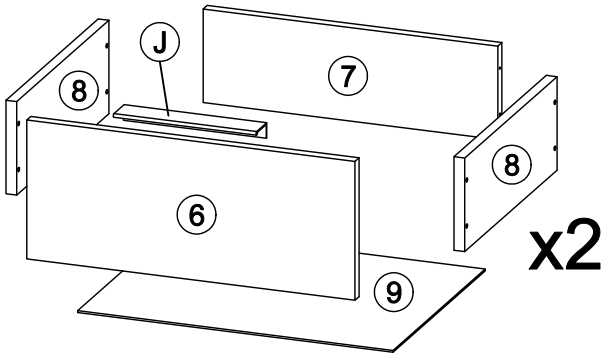

ITEM CODE 85491

STEP 1:

- Insert hardware **A2** onto panel **(1)**.
  (Repeat 5 times.)
- Insert hardware **B** onto panel **(10)** and **(11)**.
  (Repeat 8 times.)

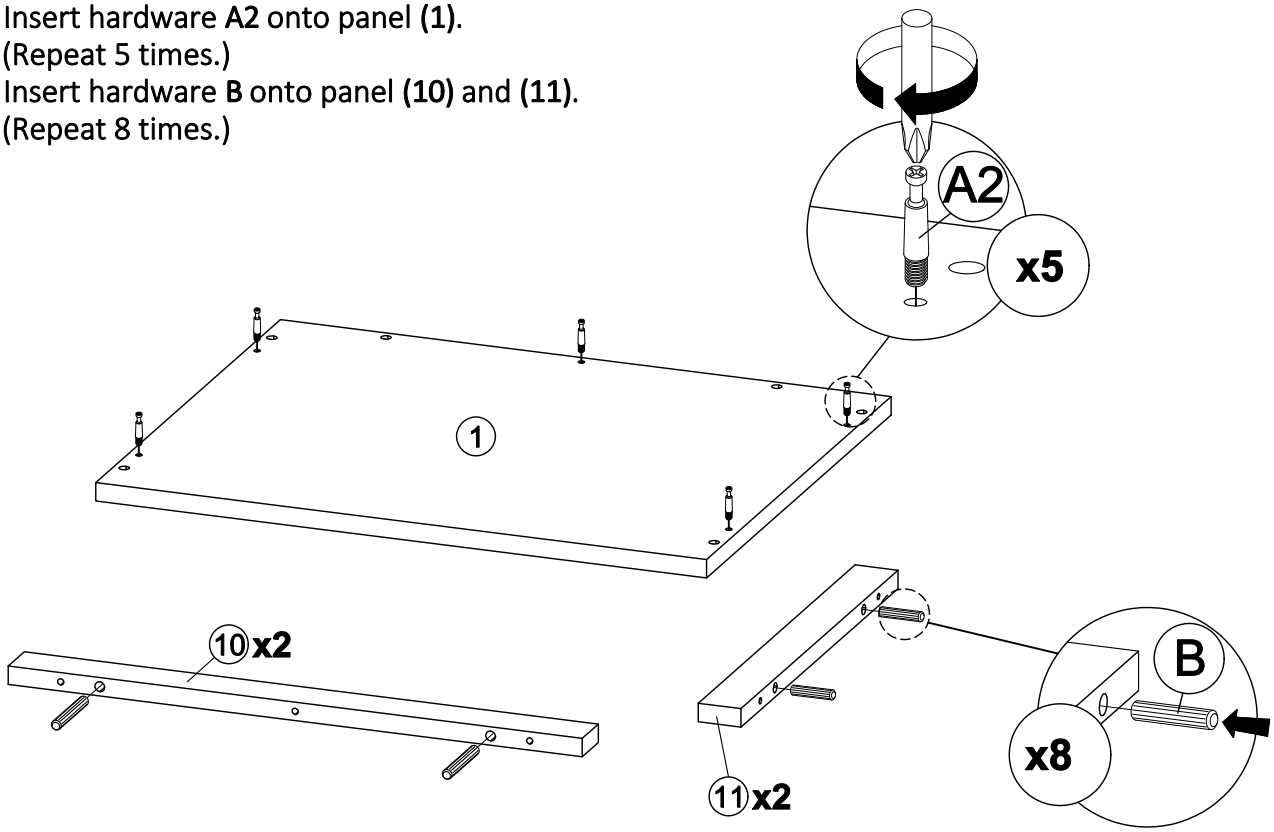

STEP 2:

- Insert hardware **A1** onto panel **(3)**, **(4)** and **(5)**.
  (Repeat 5 times.)
- Insert hardware **B** onto panel **(3)**, **(4)** and **(5)**.
  (Repeat 12 times.)

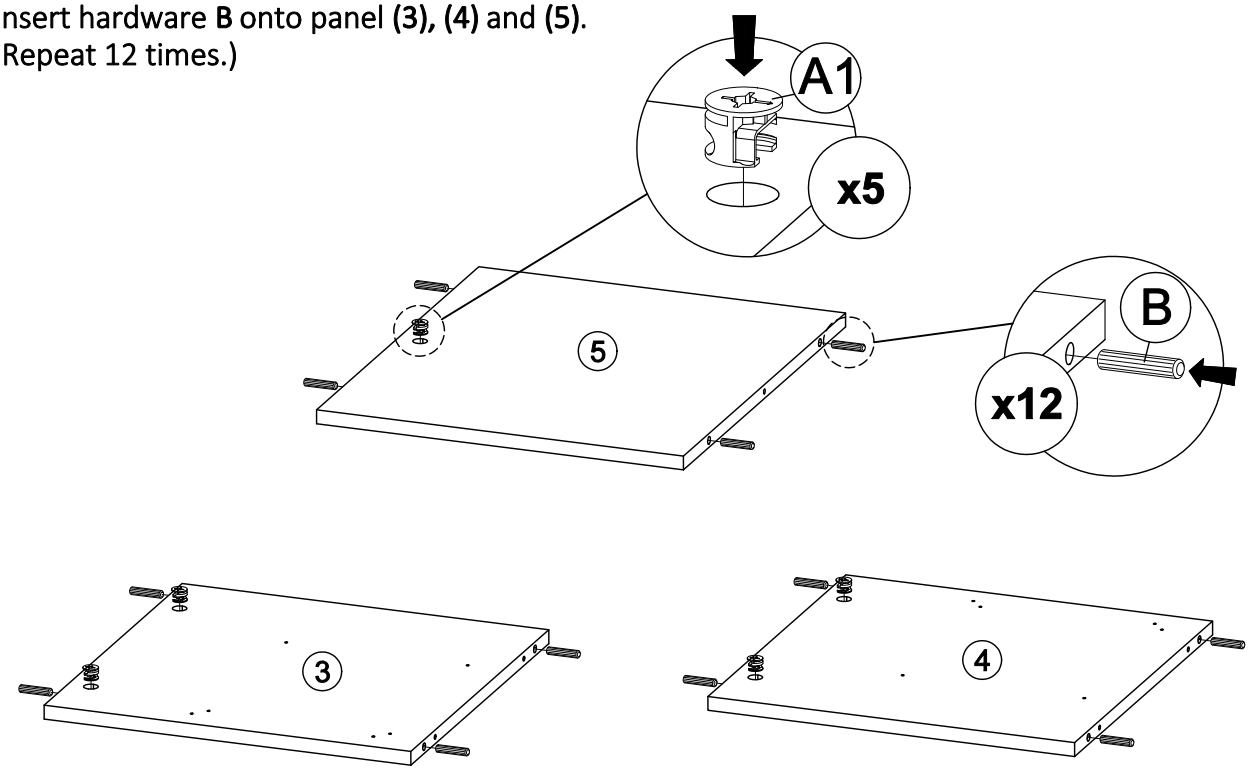

STEP 3:

- Fix hardware **K1 (L/R)** into panel **(3)** and **(4)** with hardware **E**.
  (Repeat 4 times for each hardware.)

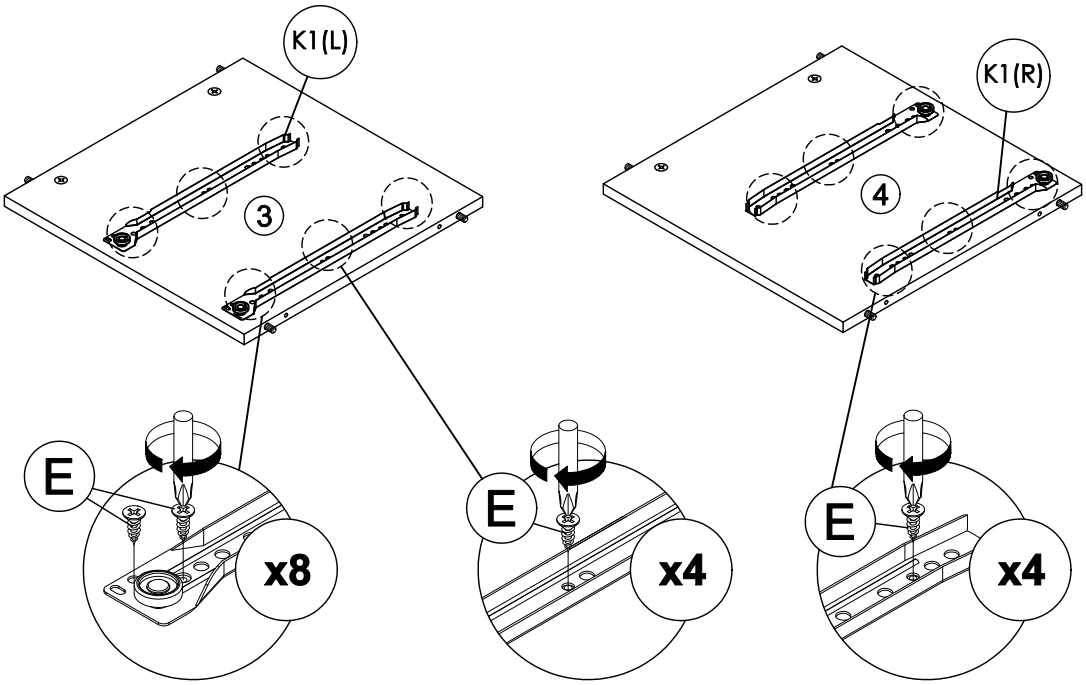

STEP 4:

- Attach panel **(3)**, **(4)** and **(5)** to panel **(1)**.
- Insert all hardware **A2** into **A1**.
- Rotate all **A1** until tight.
- Apply **A3** onto all **A1**.
  (Repeat 5 times.)

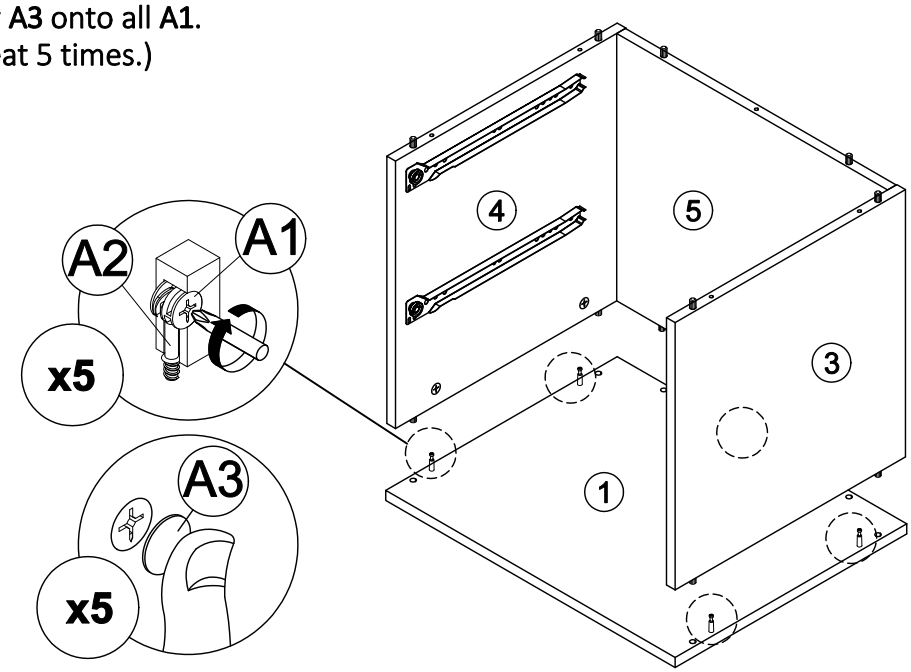

STEP 5:

- Connect panel **(2)** to panel **(3)**, **(4)** and **(5)** by using hardware **C** and **D**.
  (Repeat 5 times.)

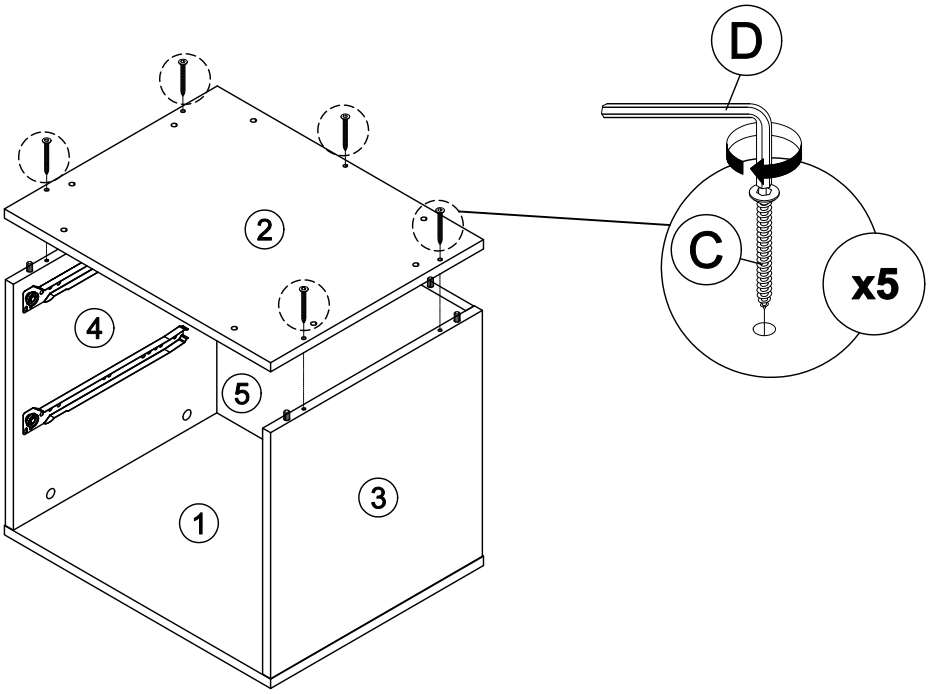

STEP 6:

- Assemble panel **(10)** and **(11)** with panel **(2)** by using hardware **G**.
  (Repeat 10 times.)

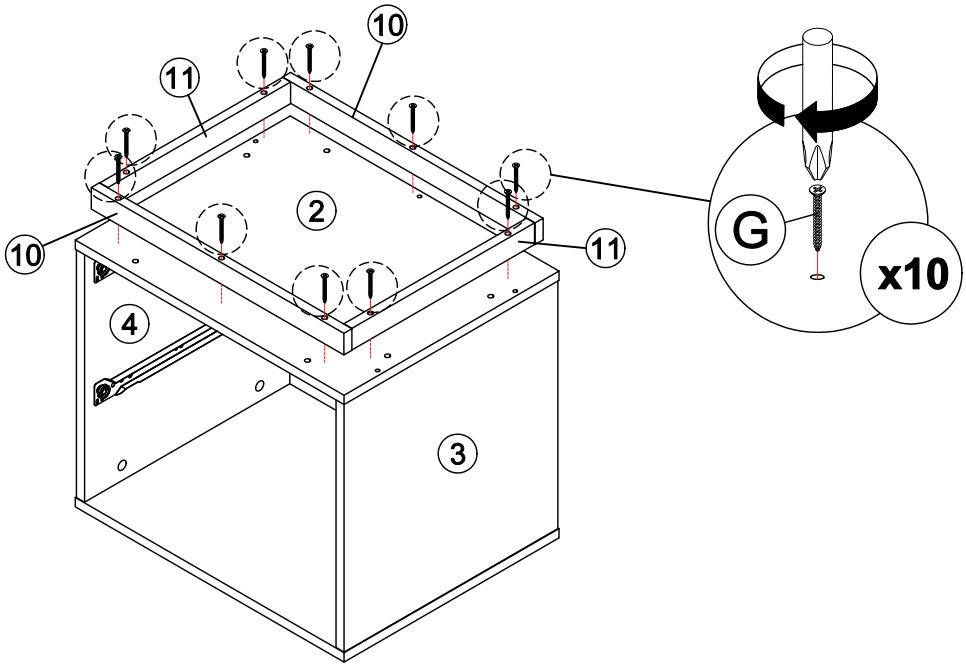

STEP 7:

- Hit hardware **I** into bottom of panel **(11)**.
  (Repeat 4 times.)

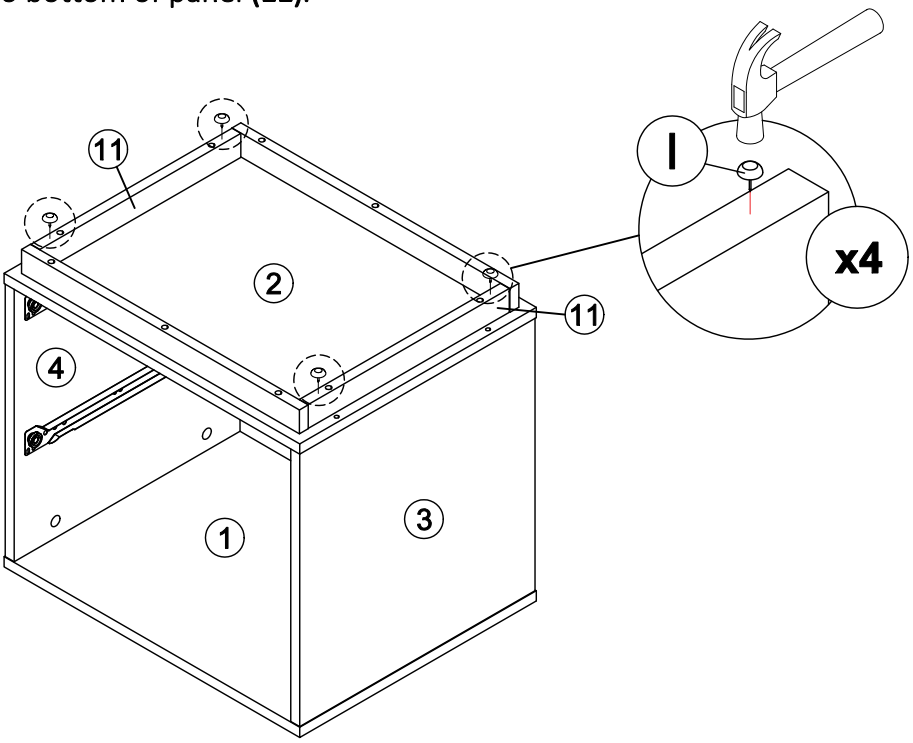

STEP 8:

- Assemble panel **(8)** with panel **(6)** and **(7)** by using hardware **G**.
  (Repeat 8 times for each drawer.)

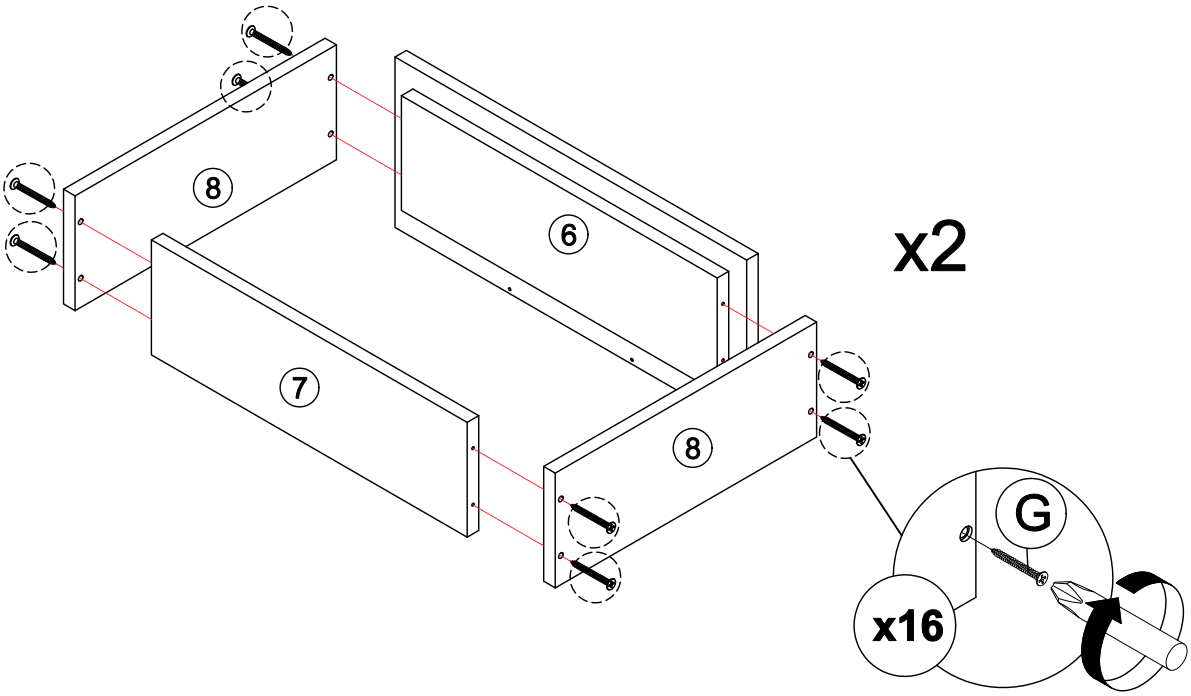

STEP 9:

- Assemble panel **(9)** to entire body with hardware **H**.
  (Repeat 8 times for each drawer.)

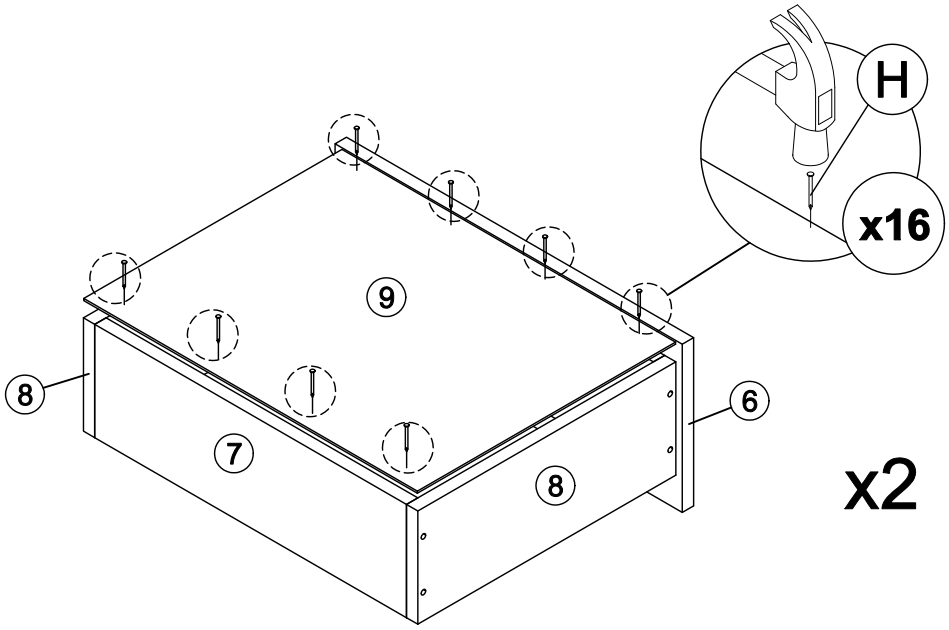

STEP 10:

- Assemble hardware **K2 (L/R)** to panel **(9)** by using hardware **E**.
  (Repeat 3 times for each hardware.)

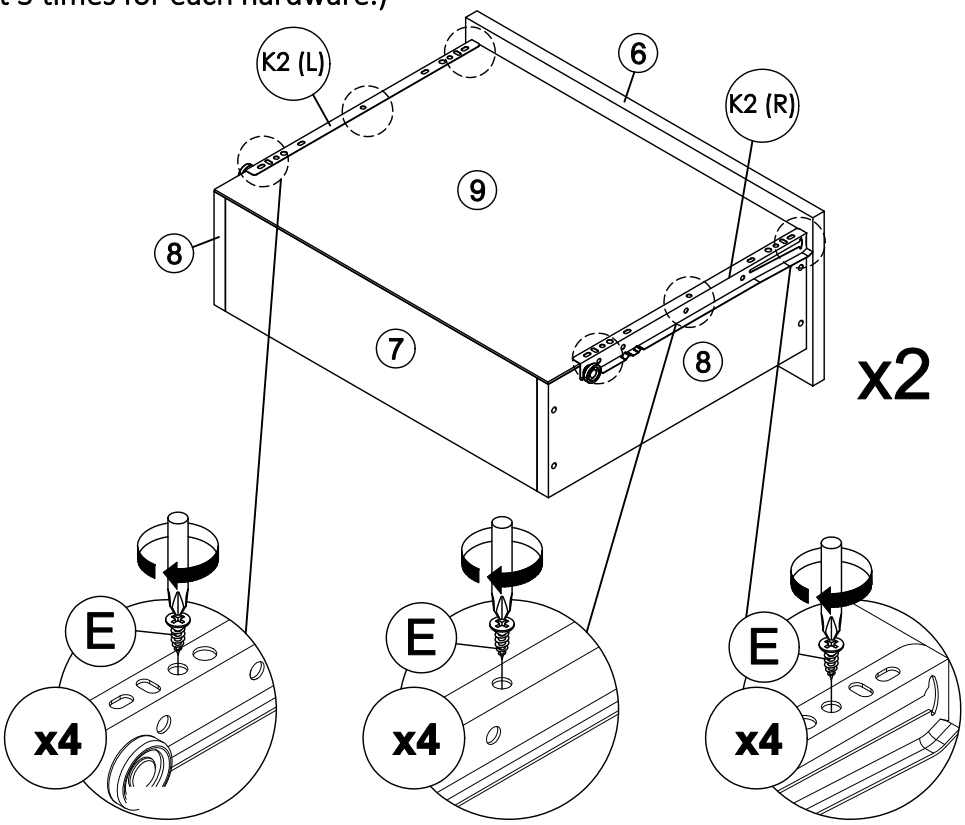

STEP 11:

- Fix hardware J onto panel **(6)** by using hardware F.
  (Repeat 2 times for each hardware.)

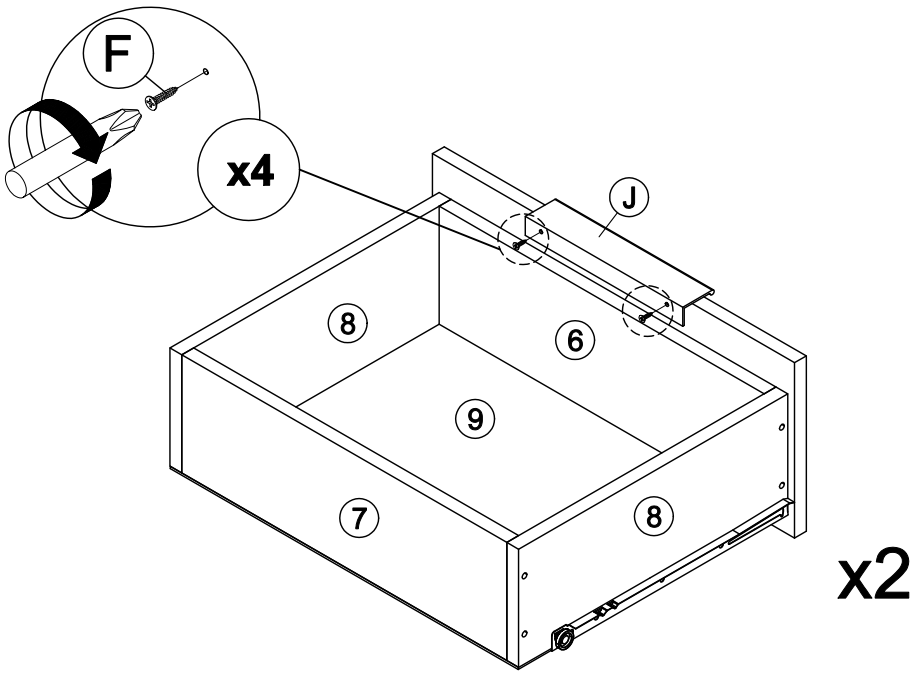

STEP 12:

- Put all the drawer in place along the drawer slides.

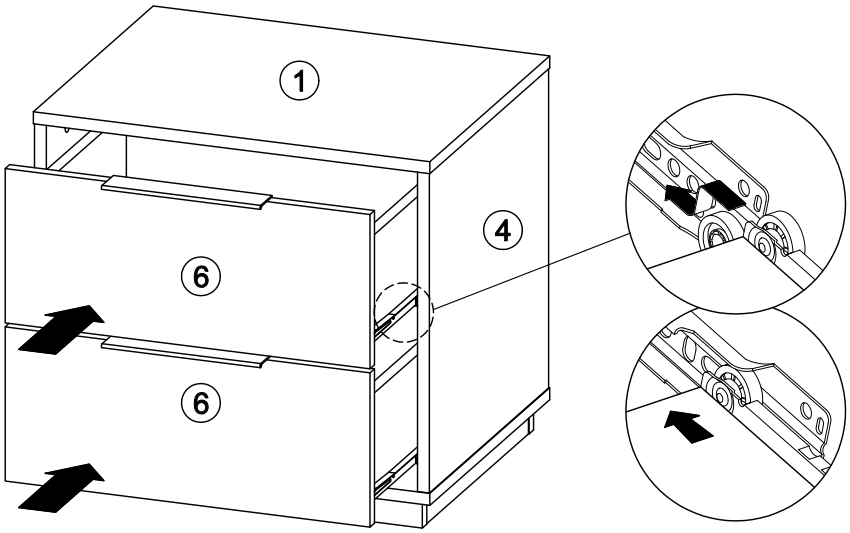

ASSEMBLY IS COMPLETE

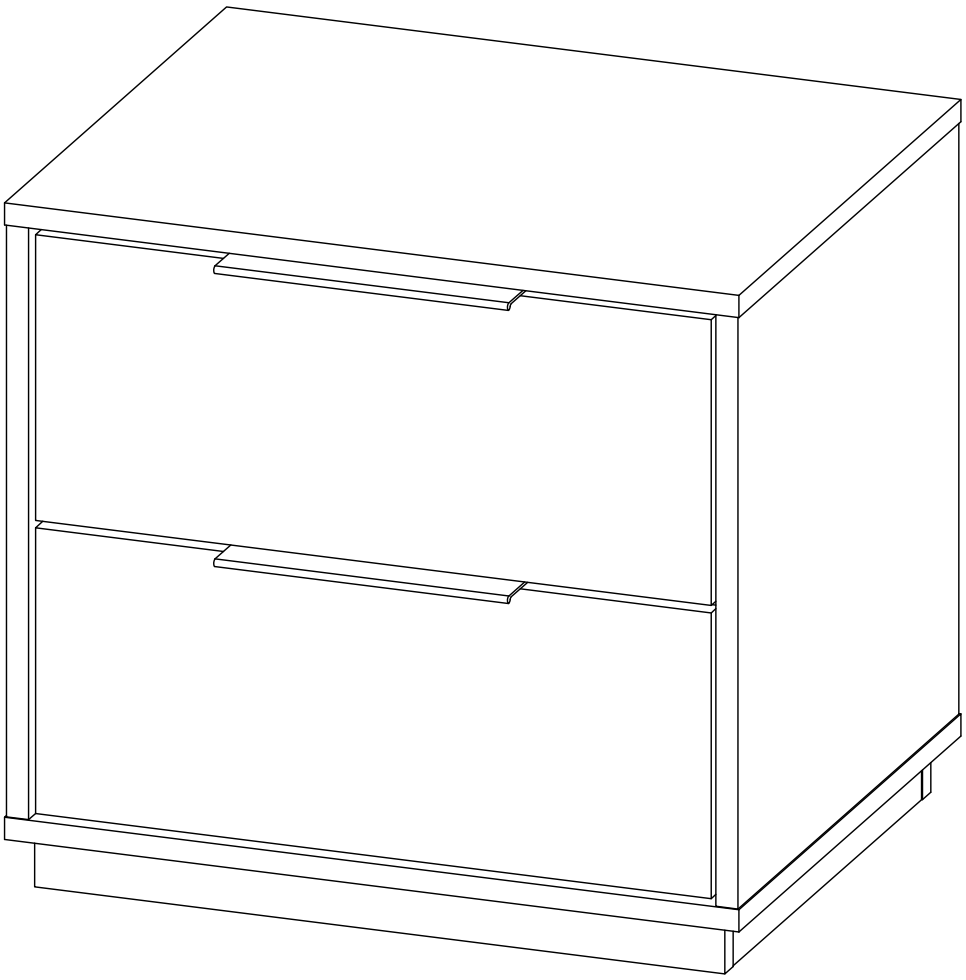

SAFETY BRACKETS INSTRUCTIONS

1. Attach one Metal Bracket to the wall with the Wall Screw. Make sure to attach the Metal Bracket into a stud. If mounting into brick or masonry you will need to acquire wall anchors.

2. Attach the second Metal Bracket to the back of furniture frame with the Pan Head Screws.

3. Move the furniture to its final position. Thread a Cable Tie through the both Metal Bracket and tighten until snug. Do not over tighten.

4. Make sure that the Metal Bracket are firmly attached to the wall and furniture and that the Cable Tie is snug.

HARDWARE

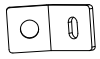

Metal Bracket
X4

Cable Tie
X2

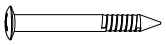

Wall Screw
X2

Pan Head Screw
X2

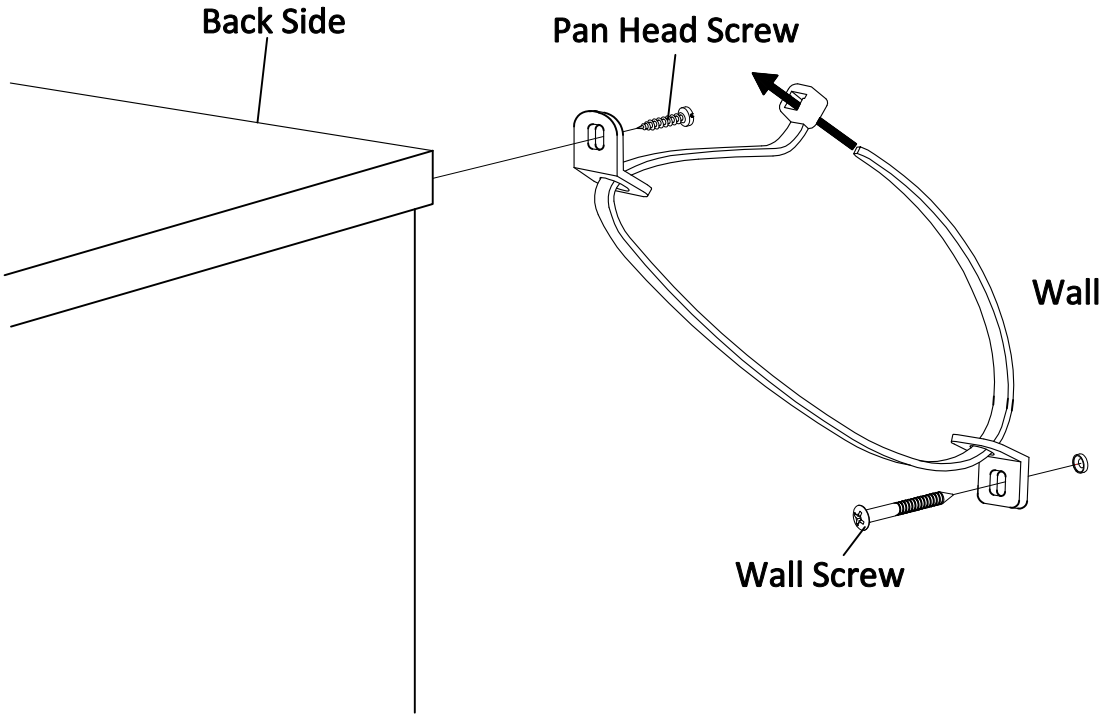

CARE AND MAINTENANCE

To protect your furniture, we suggest the following :

– Avoid placing your furniture in direct sunlight.

– Do not place furniture directly under window.

– Do not place sharp materials (knife, fork, etc.) directly onto your furniture as sharp material may scrape and damage the finish.

– Do not place material with high temperature directly onto the surface of your furniture.

– Clean up spills quickly. Water left over a prolonged period of time may cause damage. Alcohol, perfume, nail polishes, aftershave and some medication may cause server finish damage if not cleaned immediately.

– Use a clean, soft, dry, lint free absorbent cloth to clean your furniture. Do not use any detergent as they may contain ingredients that may react and damage the finish.

NOTE: If the above care advise is not adhered to your product warranty may become void.